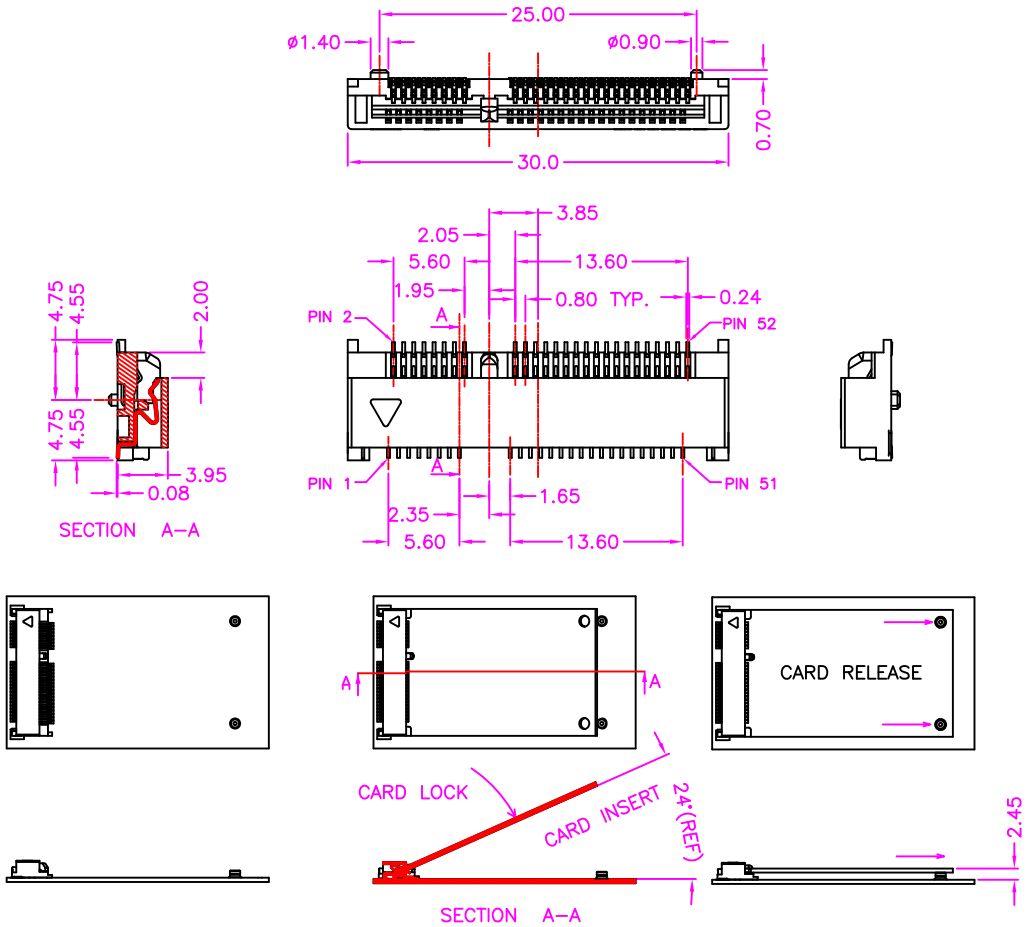


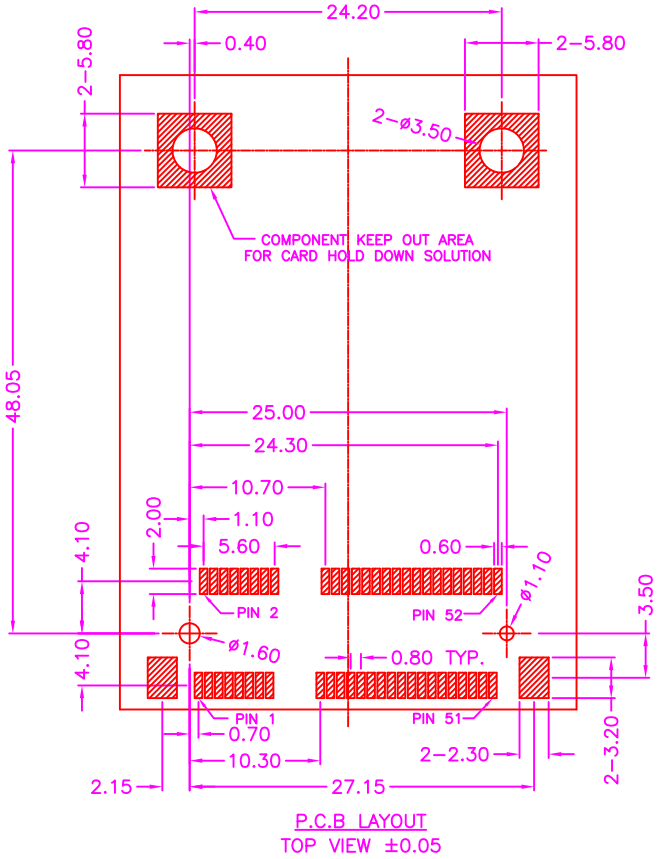


## MATERIALS

HOUSING: LCP (UL 94V–0)
SOLDER PAD: COPPER ALLOY, TIN PLATING
TERMINAL: COPPER ALLOY, GOLD PLATED

## SPECIFICATION

CURRENT RATING: 0.5 AMP MAX
DIELECTRIC WITHSTANDING: 300V AC FOR ONE MINUTE
CONTACT RESISTANCE: 55m OHMS MAX
INSULATION RESISTANCE: 500M OHMS MIN AT DC 500V
OPERATION TEMPERATURE: –40°C~+85°C

## PART NUMBER:

MCEFT – 5 2 * – 1 2 1

SERIES
NO. OF POS.
CONTACT PLATED OPTION
TAPE REEL PACKAGE

1: GOLD FLASH
3: 3u" GOLD
5: 5u" GOLD
6: 10u" GOLD
7: 15u" GOLD
9: 30u" GOLD

## INFORMATION

COMPATIBLE COPPER TUBE DRAWING NO:
ZMCEFT–001

COMPATIBLE SCREW DRAWING NO:
ZMCEFT–002

| | | | | | | | | | |
|---|---|---|---|---|---|---|---|---|---|
| ZICONN ELECTRONIC CO., LTD. WWW.ZICONN.COM 886-3-4687695 | TOLERANCES X.±0.40 .XX±0.20 .X±0.30 .XXX±0.10 | REV. | A | DRAWED BY | Zhong 2018/4/2 | TITLE | MINI PCI EXPRESS, 0.80mm PITCH, PCB MOUNT, SMT, FEMALE, 1 KEY, WITH PAD HEIGHT=4.00mm | | |
| | | | | APPROVED BY | Lion 2018/4/2 | DRAW NO. | MCEFT–001 | UNIT | MM | Sheet | 1/2 |

C0131

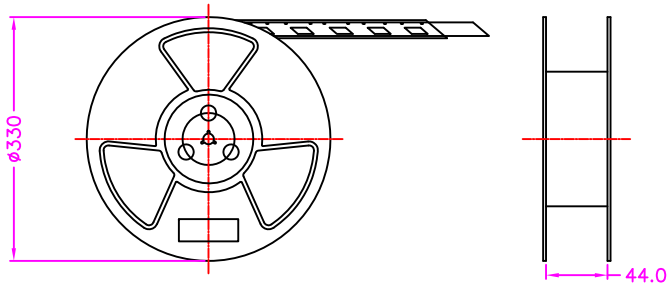


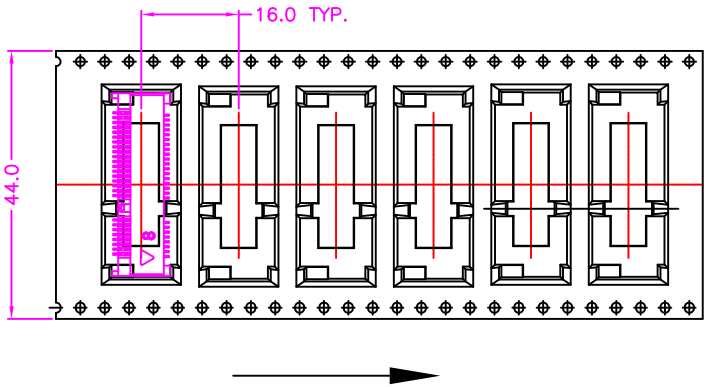


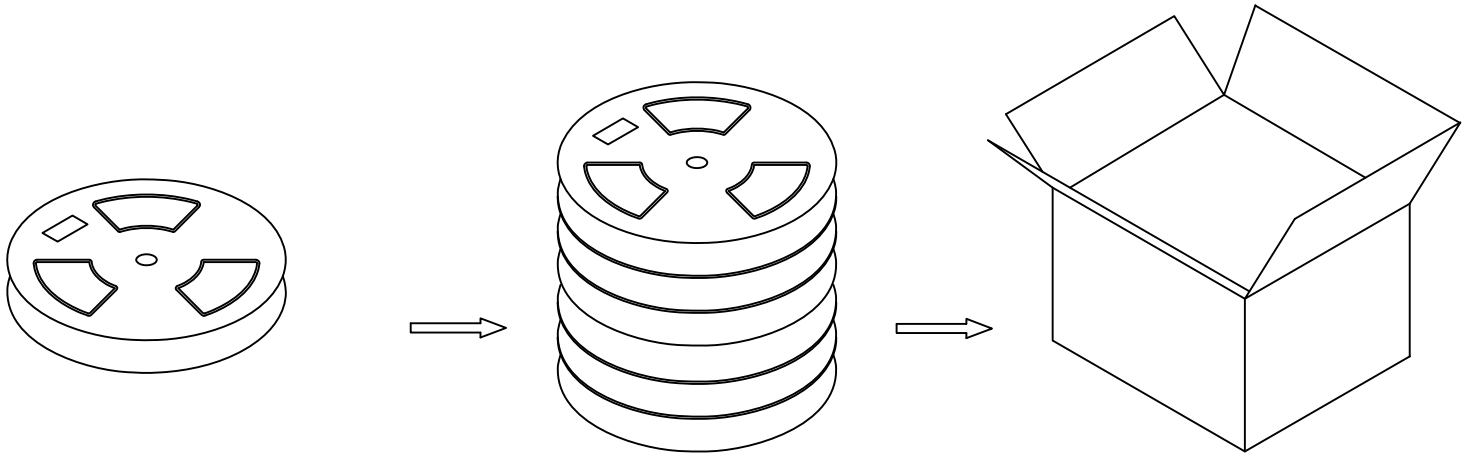

NOTE: 700PCS/ REEL, 4200PCS/ 6 REEL/ CARTON

| | | | | | | | | | |
|---|---|---|---|---|---|---|---|---|---|
| ZICONN ELECTRONIC CO., LTD. WWW.ZICONN.COM 886-3-4687695 | TOLERANCES X.±0.40 .XX±0.20 .X±0.30 .XXX±0.10 | REV. | A | DRAWED BY | Zhong 2018/4/2 | TITLE | MINI PCI EXPRESS, 0.80mm PITCH, PCB MOUNT, SMT, FEMALE, 1 KEY, WITH PAD HEIGHT=4.00mm | | |
| | | | | APPROVED BY | Lion 2018/4/2 | DRAW NO. | MCEFT-001 | UNIT MM | Sheet 2/2 |

C0131