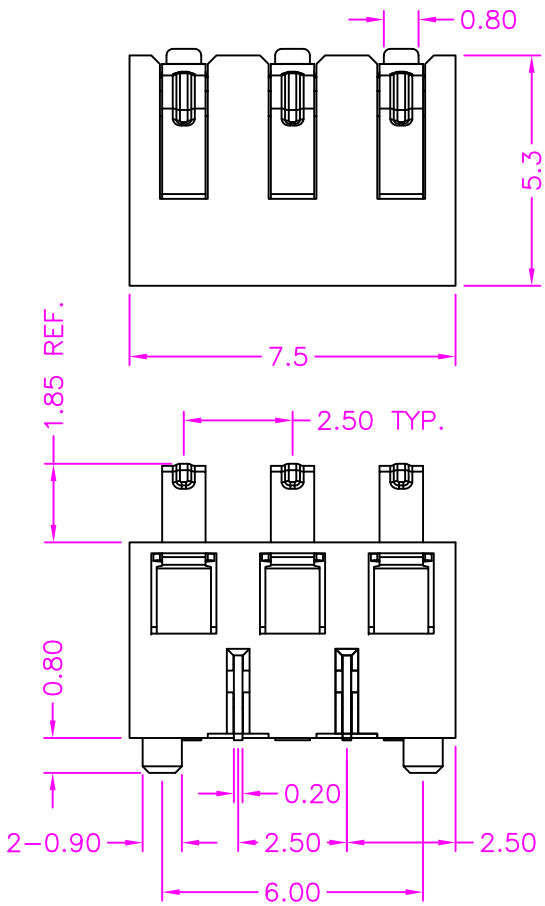

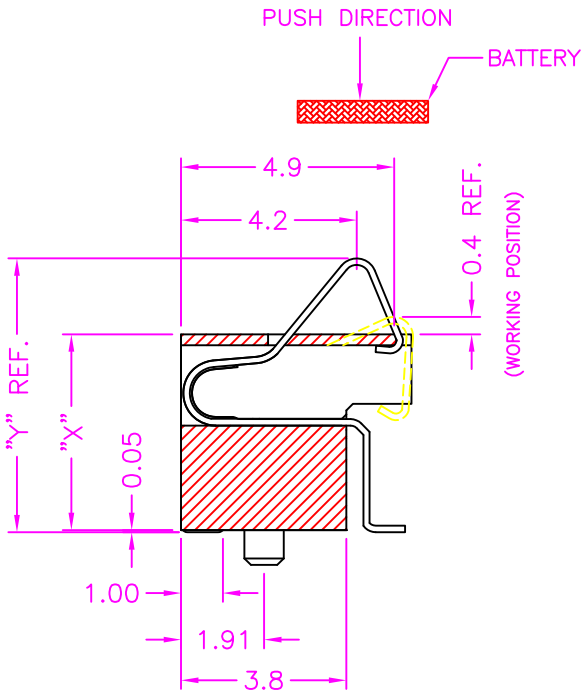

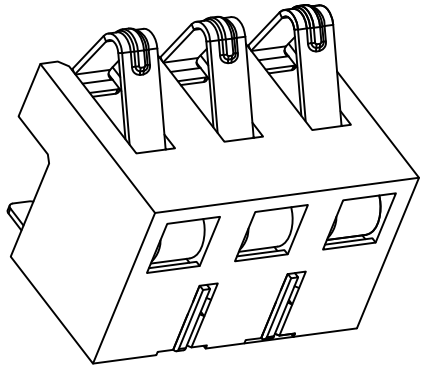

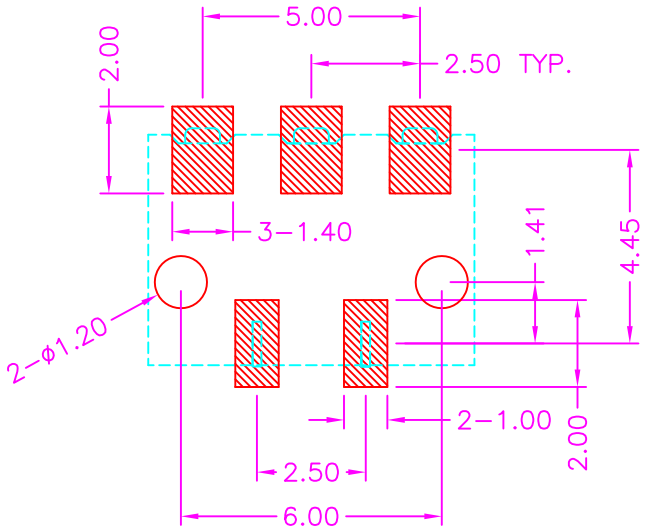

P.C.B LAYOUT
TOP VIEW ±0.05

MATERIALS

HOUSING: HI-TEMP. PLASTIC (UL 94V-0), BLACK
PAD: COPPER ALLOY, TIN PLATED
TERMINAL: COPPER ALLOY, GOLD PLATED

SPECIFICATION

CURRENT RATING: 2 AMP MAX
DIELECTRIC WITHSTANDING: 500V AC FOR ONE MINUTE
CONTACT RESISTANCE: 50m OHMS MAX
INSULATION RESISTANCE: 1000M OHMS MIN AT DC 500V
OPERATION TEMPERATURE: -40°C~+85°C

PART NUMBER:
ABTGL - 0 3 * - 1 2 2 *

SERIES
NO. OF POS.
TERMINAL PLATED OPTION
1: GOLD FLASH
3: 3u" GOLD
5: 5u" GOLD
6: 10u" GOLD
7: 15u" GOLD
9: 30u" GOLD
TAPE REEL PACKAGE
HEIGTH OPTION REF. TABLE

TABLE

P/N	X	Y
A	4.00	5.90
B	4.50	6.40
C	5.50	7.40

ZICONN ELECTRONIC CO., LTD.
WWW.ZICONN.COM 886-3-4687695

TOLERANCES	REV.	A	DRAWED BY	Zhong 2021/11/1	TITLE	BATTERY, 2.50mm PITCH, PCB MOUNT, VERTICAL SMT, WITH POST & PAD, 3PIN			
X.±0.40 .XX±0.20 .X±0.30 .XXX±0.10			APPROVED BY	Lion 2021/11/1	DRAW NO.	ABTGL-002	UNIT	MM	Sheet 1/1

C0150