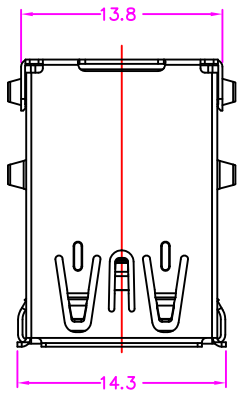

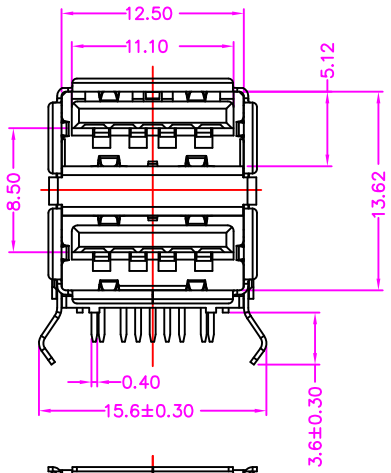

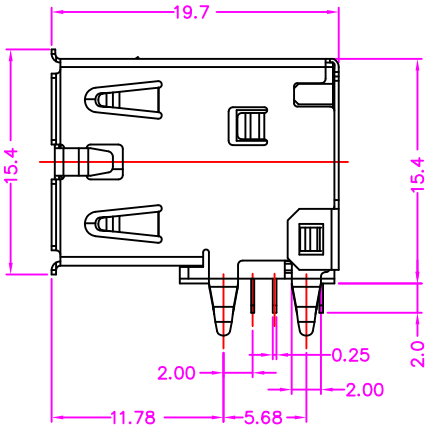

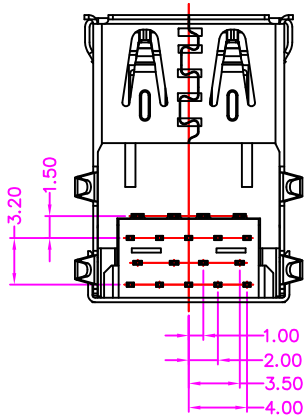

MATERIALS

HOUSING: HI-TEMP. PLASTIC (UL 94V-0), BLUE
SHELL: STAINLESS STEEL, NICKEL PLATING
MIDDLE SHELL: STAINLESS STEEL, NICKEL PLATING
TERMINAL: COPPER ALLOY, GOLD PLATED ON CONTACT AREA
TIN PLATING ON SOLDER TAIL

SPECIFICATION

CURRENT RATING: 1.5 AMP MAX
DIELECTRIC WITHSTANDING: 500V AC FOR ONE MINUTE
CONTACT RESISTANCE: 30m OHMS MAX
INSULATION RESISTANCE: 1000M OHMS MIN AT DC 500V
OPERATION TEMPERATURE: -40°C~+85°C

PART NUMBER:
BUSGC - 1 8 * T - 1 1 5

SERIES
NO. OF POS.
CONTACT PLATED OPTION
TIN PLATING ON SOLDER TAIL
TRAY PACKAGE

1: GOLD FLASH
3: 3u" GOLD
5: 5u" GOLD
6: 10u" GOLD
7: 15u" GOLD
9: 30u" GOLD

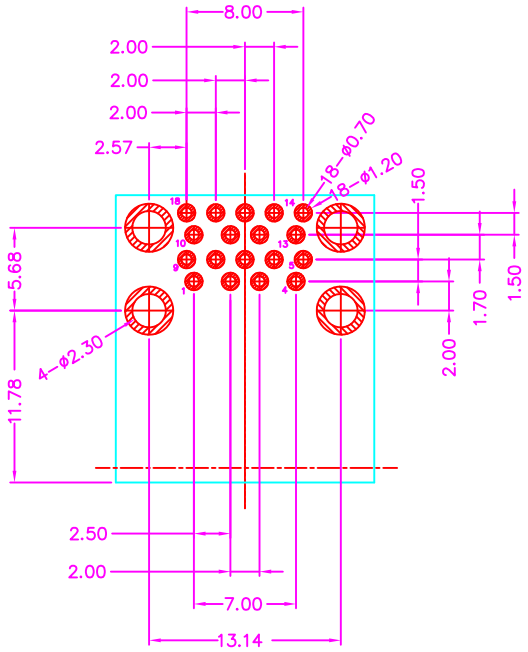

P.C.B LAYOUT
TOP VIEW ±0.05

PIN NUMBER	SIGNAL NAME
1,10	VBUS
2,11	D-
3,12	D+
4,13	GND
5,14	StdA_SSRX-
6,15	StdA_SSRX+
7,16	GND_DRAIN
8,17	StdA_SSTX-
9,18	StdA_SSTX+
Shell	Shield

ZICONN ELECTRONIC CO., LTD.
WWW.ZICONN.COM 886-3-4687695

TOLERANCES	REV.	A	DRAWED BY	KiKi 2022/7/12	TITLE	STACKED 2x1 USB 3.0 A TYPE, PCB MOUNT, R/A, METAL SHIELD, FEMALE			
X.±0.40 .XX±0.20 .X±0.30 .XXX±0.10			APPROVED BY	Lion 2022/7/12	DRAW NO.	BUSGC-005	UNIT	MM	Sheet 1/2

C0101

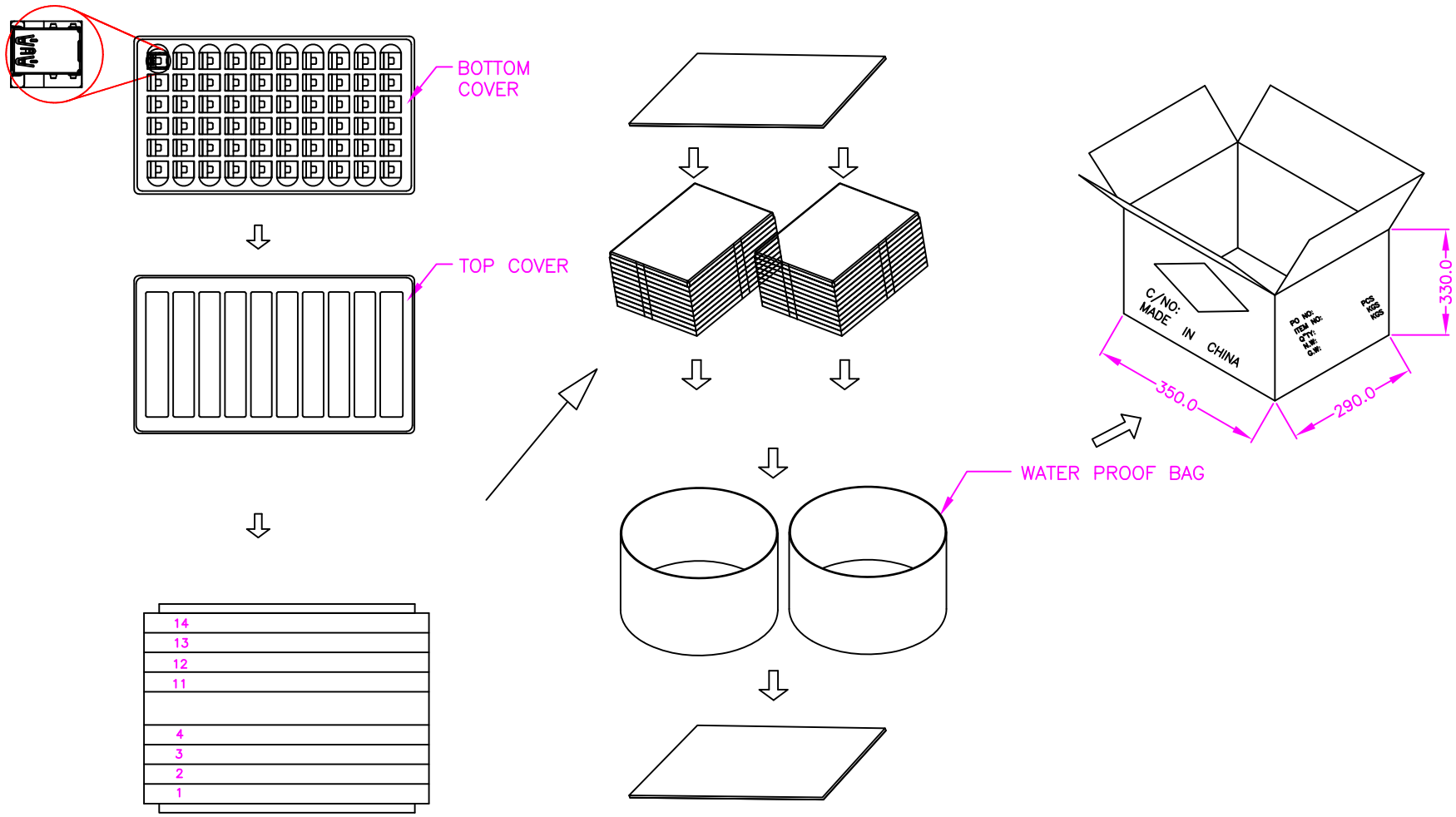

NOTE: 60PCS/ TRAY, 1680PCS/ 28 TRAY/ CARTON

ZICONN ELECTRONIC CO., LTD. WWW.ZICONN.COM 886-3-4687695	TOLERANCES X.±0.40 .XX±0.20 .X±0.30 .XXX±0.10	REV.	A	DRAWED BY	KiKi 2022/7/12	TITLE	STACKED 2x1 USB 3.0 A TYPE, PCB MOUNT, R/A, METAL SHIELD, FEMALE		
				APPROVED BY	Lion 2022/7/12	DRAW NO.	BUSGC-005	UNIT MM	Sheet 2/2

C0101