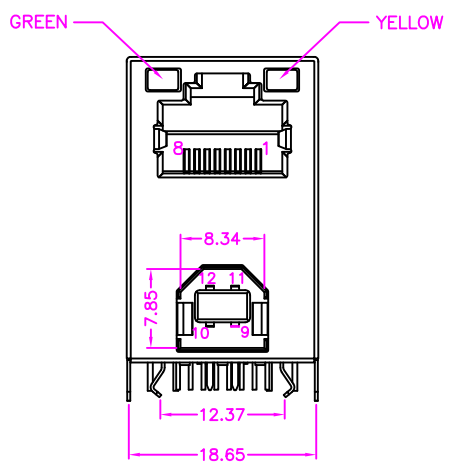

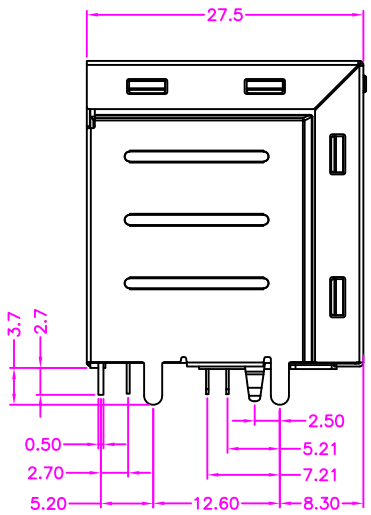

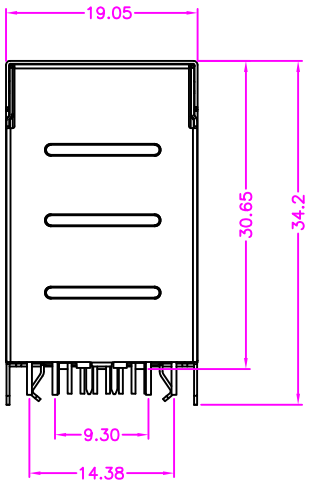

MATERIALS

USB HOUSING: THERMOPLASTIC (UL 94V–0), WHITE
RJ45 HOUSING: THERMOPLASTIC (UL 94V–0), BLACK
SHELL: SPCC, NICKEL PLATING
TERMINAL: COPPER ALLOY, GOLD PLATED ON CONTACT AREA
TIN PLATING ON SOLDER TAIL

SPECIFICATION

USB
CURRENT RATING: 1 AMP MAX
DIELECTRIC WITHSTANDING: 500V AC FOR ONE MINUTE
CONTACT RESISTANCE: 30m OHMS MAX
INSULATION RESISTANCE: 1000M OHMS MIN AT DC 500V
OPERATION TEMPERATURE: −40°C~+85°C

RJ45
CURRENT RATING: 1.5 AMP MAX
DIELECTRIC WITHSTANDING: 500V AC FOR ONE MINUTE
CONTACT RESISTANCE: 30m OHMS MAX
INSULATION RESISTANCE: 500M OHMS MIN AT DC 500V
OPERATION TEMPERATURE: −40°C~+85°C

PART NUMBER:
SCMJUS – 1 6 * T – 7 1 3

SERIES
NO. OF POS.
CONTACT PLATED OPTION
TIN PLATING ON SOLDER TIAL
TRAY PACKAGE

CONTACT PLATED OPTION
1: GOLD FLASH
3: 3u" GOLD
5: 5u" GOLD
6: 10u" GOLD
7: 15u" GOLD
9: 30u" GOLD
11: 6u" GOLD

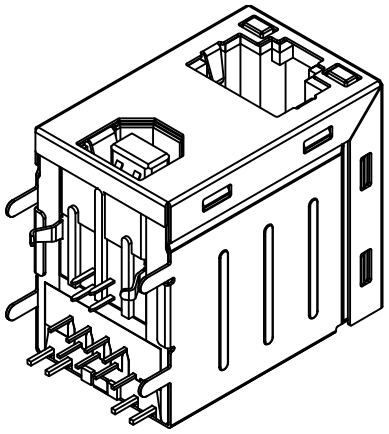

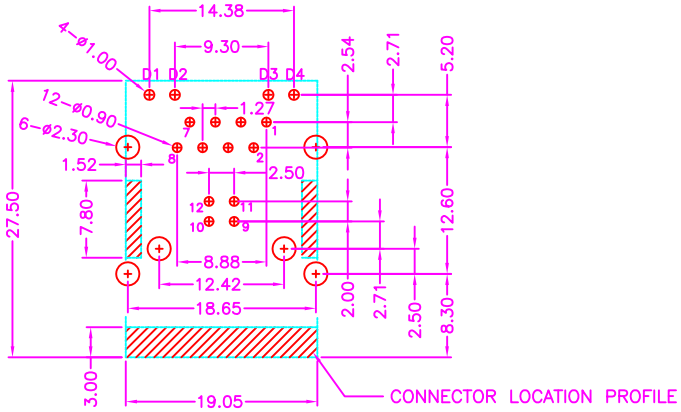

P.C.B LAYOUT
TOP VIEW ±0.05

LED ELECTRICAL CHARACTERISTIC

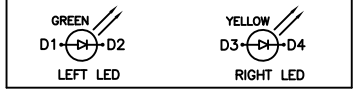

Standard LED	Wavelength	Forward V (Min/Max)	Forward A	Type
Green	568nm	1.8V/2.8V	20mA	squareness
Yellow	585nm	1.8V/2.8V	20mA	squareness

NOTE:
RJ45 CAVITY CONFIRMS TO FCC RULES AND REGULATIONS PART 68, SUBPART F.

ZICONN ELECTRONIC CO., LTD. WWW.ZICONN.COM 886-3-4687695	TOLERANCES X.±0.40 .XX±0.20 .X±0.30 .XXX±0.10	REV.	A	DRAWED BY	Zhong 2019/4/17	TITLE	STACKED RJ45 + USB 2.0 TYPE B FEMALE, PCB MOUNT, R/A METAL SHIELD, WITH LED		
				APPROVED BY	Lion 2019/4/17	DRAW NO.	SCMJUS–003	UNIT MM	Sheet 1/1

C0164